Quickie Nitrum

January 2026

EIR12

Mark For:

Date: _____
Dealer Acct #: _____
Dealer: _____
Dealer Contact: _____
Dealer Address: _____
Dealer City: _____ ST: _____ ZIP: _____
Dealer Phone: ( ) Fax: ( )
Confirmation Email: _____
Confirm Via: ☐ Fax ☐ Email

Submitting for: ☐ **Quote** ☐ **Order**

PO#: _____

ADDITIONAL SHIPPING INFORMATION

Ship To: _____
Attention: _____
Address: _____
Address: _____
Ship To City: _____ ST: _____ ZIP: _____
Ship To Phone: ( ) Fax: ( )

*The **HCPCS CODES** herein are based on PDAC verification or interpretation of Medicare definitions and guidelines. Non-Medicare payers may accept alternative **HCPCS CODES**, including misc. codes to ensure access for their enrollees. The use of **HCPCS CODES** does not ensure coverage or payment.*

1. FRAME

Base Model

Weight capacity 275 lbs for Open frame. 300 lbs for Hybrid dual tube frame.

✔	Option #	HCPCS	Definition	Price
☐	112WM101	K0005	Quickie Nitrum - Open frame *Use E1235 for sizes 14" or less*	$3,081.00
☐	112WM102	K0005	Quickie Nitrum Hybrid - *Dual tube* *Use E1235 for sizes 14" or less.*	$3,425.00

Backrest Frame Type

Active Rigid - welded must select Active Axle plate and Active Fixed backrest.

✔	Option #	HCPCS	Definition	Price
☐	112FT68		Adjustable	NC
☐	112FT69		Active Rigid - Welded	$349.00

Frame Angle

*See **FIGURE 1** Measure from front frame to floor.*

✔	Option #	HCPCS	Definition	Price
☐	112FA1		75°	NC
☐	112FA8		80°	NC
☐	112FA2		85°	NC

Frame Inset Per Side

*See **FIGURE 2** Frame Inset is the distance from the outside of the seat tube to the outside of the footrest.*

✔	Option #	HCPCS	Definition	Price
☐	112FF1		0"	NC
☐	112FF2		1" *(N/A w/ 12" wide)*	NC
☐	112FF3		2" *(N/A with 12" & 13" wide)*	NC

Frame Length

*See **FIGURE 3** measurement for set up in the APPENDIX page 7.*

✔	Option #	HCPCS	Definition	Price
☐	112FS9		Standard	NC
☐	112FS34		Classic	NC

** **Standard Frame** - Seat Sling to front frame bend angle is 1.5" shorter than the classic position.*
***Classic Frame** - Traditional seat sling to front frame bend angle dimensions. Front of back cane post to front edge of seat sling will remain the same for both Standard and Classic.*

Transit

WC-19 and ISO 7176 standard compliance. N/A with Active Rigid.

✔	Option #	HCPCS	Definition	Price
☐	112TO45	K0108	Transit System	$374.00

Nitrum - Open frame

Nitrum Hybrid - Dual tube frame

Power Assist

To order any Empulse Power Assist productd please see the Order Form for Part #'s

	Option	HCPCS	DESCRIPTION	RETAIL
☐	209MW91	E0986	**Empulse R90** Includes: Device Charger, Wireless Control Box, V-Lock Latch, Travel Bag, **2.5Ahr** Removable Battery	$7,300.00
☐	209MW92	E0986	**Empulse M90** M90 Wheels, Dual Controller, Two M90 Batteries, Mounting Hardware,Quick Release Axles, and Device Charger	$7,950.00
☐	147MW95	E0986	**Empulse F35** Includes: F35 Stick, Subframe mount, Frame clamps kit, and Charger	$6,500.00

© 1/2026 MK-129759 Rev J

✔	Option #	HCPCS	Definition	Price	✔	Option #	HCPCS	Definition	Price

2. SIZE / SEATING

Depth Adjustable Backrest (Optional)

*See **Figure 4** Depth Adjust Backrest extends the frame rear of the seat sling, select a factory setting. N/A with 19"-20" seat depth. N/A with Active Rigid frame.*

☐	112DP02		0 Setting *Backrest at standard position, field adjustable to -1" or -2"*	$192.00
☐	112DP03		-1 Setting *Backrest -1" offset, field adjustable to flush or -2"*	$192.00
☐	112DP04		-2 Setting *Backrest -2" offset, field adjustable to flush or -1"*	$192.00

Figure 4

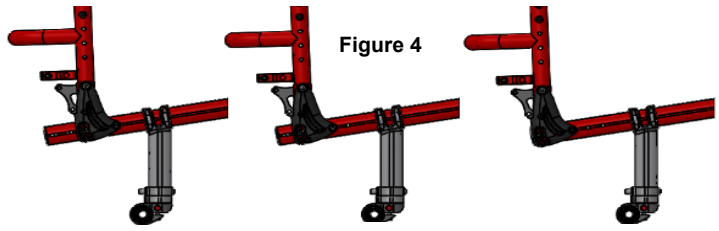

0 position **-1" position** **-2" position**

Seat Width

*See **FIGURE 2** Measure from outside of seat tube to the outside of opposite seat tube.*

☐	112S3	12"	NC	☐	112S8	17"	NC
☐	112S4	13"	NC	☐	112S9	18"	NC
☐	112S5	14"	NC	☐	112S10	19"	NC
☐	112S6	15"	NC	☐	112S48	20" *(E2201)*	$583.00
☐	112S7	16"	NC				

Seat Depth

*See **FIGURE 1** Measure from front of back post to front edge of seat sling. Seat sling is 1" shorter than depth ordered, but actual seat depth will remain the same as ordered.*

☐	112SD5	12"	NC	☐	112SD10	17"	NC
☐	112SD6	13"	NC	☐	112SD11	18"	NC
☐	112SD7	14"	NC	☐	112SD12	19"	NC
☐	112SD8	15"	NC	☐	112SD13	20" *(E2203)*	$641.00
☐	112SD9	16"	NC				

Figure 1

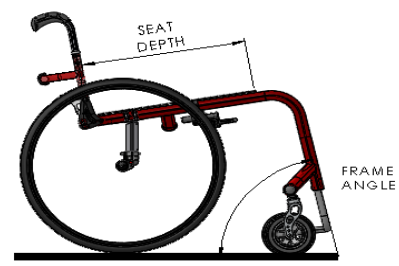

Figure 2

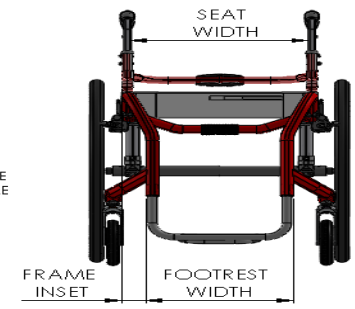

Seating Systems

☐	112OP01		Standard Seat Sling	NC
☐	112OP14		Tension Adjustable seat sling	$86.00
☐	112OP04		Omit Seat Sling	NC

Seat Sling Options

Utility & catheter bags are sewn at the bottom of the upholstery. Catheter bag N/A in 12" depth.
Utility bag and Cathether bag combination N/A at 15" width or less.

☐	1128A65		1 Utility Bag	$86.00
☐	1128A66		1 Catheter bag	$86.00

JAY Cushions (Optional)

To order any JAY cushions on-chair, please see the JAY price list.
Cushion name or part number must be filled out with desired width and depth.

☐	112JC20	JAY Bundled Cushion Cushion Name or Part # Width: Depth:		Price List

3. CASTERS / SEAT HEIGHT

Front Seat Height

*See **FIGURE 5** Measure from the front of the seat rail to the floor.*

☐	112SH14	16.0"	NC	☐	112SH20	18.5"	NC
☐	112SH15	16.5"	NC	☐	112SH21	19.0"	NC
☐	112SH16	17.0"	NC	☐	112SH23	19.5"	NC
☐	112SH17	17.5"	NC	☐	112SH24	20.0"	NC
☐	112SH18	18.0"	NC	☐	112SH26	20.5"	NC
				☐	112SH27	21.0"	NC

Figure 5

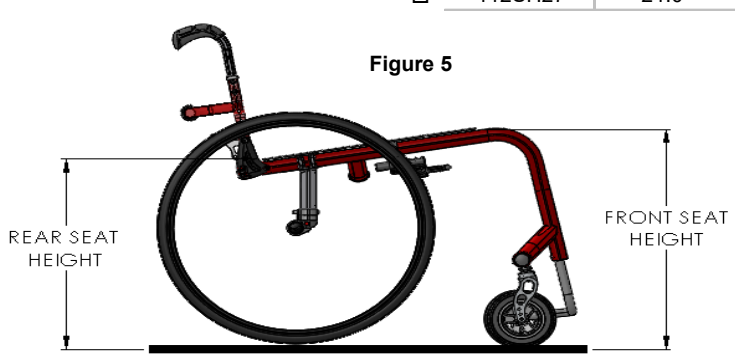

Caster Fork and Suspension

Frog Legs are not included in the Colored Anodized Package

☐	112CF65		Multiple Position	NC
☐	112CF69		Multiple Position Single Sided Fork	$197.00
☐	112CF53	E1015	Frog Legs 0 weight to 100 lbs.	$507.00
☐	112CF54	E1015	Frog Legs 101 lbs. weight to 190 lbs.	$507.00
☐	112CF55	E1015	Frog Legs 191 lbs. weight to 265 lbs.	$507.00

Caster Wheels

☐	112CW1		3" Micro	NC
☐	112CW3		4" Low Profile Polyurethane	NC
☐	112CW31		4" Micro Lighted	$82.00
☐	112CW72		4" x 1" Aluminum Poly	$129.00
☐	112CW44	E2219	4" x 1.25 Semi Pneumatic	$63.00
☐	112CW40		4" x 1.25 Spinergy CX6 cast carbon	NEW! $250.00
☐	112CW5		5" Low Profile Polyurethane	NC
☐	112CW51		5" Micro Lighted	$100.00
☐	112CW6	E2219	5" Soft Roll (Grey) -*N/A w/Frog Legs*	$105.00
☐	112CW65		5" x 1" Aluminum Poly	$129.00
☐	112CW7	E2219	5" x 1.5" Semi Pneumatic	$100.00
☐	112CW34		6" Poly	NC
☐	112CW33	E2214 E2215	6" Pneumatic	$88.00
☐	112CW35	E2219	6" x 1.5" Semi Pneumatic	$100.00

Caster Color Wheels option

***Casters are silver color unless you choose color option**. Refer to Anodize package section on Page 7 for Anodize color selection. Match Ano color pkg pick is N/A with Black option.*

☐	112CW64		4" x 1.5" Aluminum Soft Roll	$216.00
☐	112CW66		5" x 1.5" Aluminum Soft Roll	$227.00
☐	112CW68		6" x 1.5" Aluminum Soft Roll	$239.00
	Colors:	☐	Match anodize color package	***Package price***
		☐	Match frame color	$57.00
		☐	Black anodize caster only	$58.00

Caster Housing Position

*See **FIGURE 7** in page 7 for example. Options available on 0" inset only.*

☐	112LH04		Position Setting 1 (Narrow)	NC
☐	112LH05		Position Setting 2 (Wide)	NC

© 1/2026 MK-129759 Rev J

✔	Option #	HCPCS	Definition	Price	✔	Option #	HCPCS	Definition	Price

4. REAR WHEELS / SEAT HEIGHT

Rear Seat Height

See RSH matrix

☐	112RH11	13.0"	NC	☐	112RH19	17.0"	NC
☐	112RH12	13.5"	NC	☐	112RH26	17.5"	NC
☐	112RH13	14.0"	NC	☐	112RH20	18.0"	NC
☐	112RH14	14.5"	NC	☐	112RH27	18.5"	NC
☐	112RH15	15.0"	NC	☐	112RH21	19.0"	NC
☐	112RH16	15.5"	NC	☐	112RH37	19.5"	NC
☐	112RH17	16.0"	NC	☐	112RH22	20.0"	NC
☐	112RH18	16.5"	NC				

Wheel Dia.	Open Frame		Hybrid Frame	
	Min RSH	Max RSH	Min RSH	Max RSH
20	13.5	18.5	14.0	18.5
22	14.5	19.5	14.5	19.0
24	15.0	20.0	16.5	20.0
25	16.0	20.0	16.5	20.0
26	16.5	20.0	16.5	20.0

Axle

☐	112AX1	Quick Release Steel	NC
☐	112AX13	Quad Quick Release Steel *Only available with Mountain Whls.*	$147.00

Axle Plate

Extended COG N/A w/ Xtender Power Assist. 4-link suspension N/A with Hybrid frame type.

☐		Adjustable COG (1"-4")	NC
☐		Adjustable Extended COG (0"-3")	NC
☐		4-Link Suspension axle plate	NC
☐		Active Rigid (.5" to 4") Adjustment range 1/2" before and after in 1/4" increments except the .5" and 4" positions which are maxed.	NC

Rear Suspension (Optional)

4-Link Rear Suspension COG (0"-3") *Single Post only available up to 2" COG. Plastic Side Guards only available up to 2.5" COG. N/A w/Xtender.* ***Max weight capacity of 265 lbs.***

☐	112SV08	Weight from 0 lbs to 175 lbs	$729.00
☐	112SV09	Weight from 176 lbs. to 265 lbs	$729.00

Rear Wheel

Ultra Lightweight only available w/ Aluminum Handrim. ***Max weight capacity on Proton wheels is 220 lbs, Spinergy CLX is 265 lbs.***

☐	112RW103	20" Mag Wheel 5 Spoke	NC
☐	112RW104	22" Mag Wheel 5 Spoke	NC
☐	112RW102	24" Mag Wheel 5 Spoke	NC
☐	112RW90	20" Lite Spoke	$234.00
☐	112RW91	22" Lite Spoke	$234.00
☐	112RW92	24" Lite Spoke	NC
☐	112RW93	25" Lite Spoke	NC
☐	112RW94	26" Lite Spoke	$234.00
☐	112RW06	22" Ultra Lightweight Spoke Wheel	$292.00
☐	112RW10	24" Ultra Lightweight Spoke Wheel	$292.00
☐	112RW16	25" Ultra Lightweight Spoke Wheel	$292.00
☐	112RW28	22" Spinergy SPOX Black Spokes	$985.00
☐	112RW95	24" Spinergy SPOX Black Spokes	$985.00
☐	112RW96	25" Spinergy SPOX Black Spokes	$985.00
☐	112RW97	26" Spinergy SPOX Black Spokes	$985.00
☐	112RW32	22" Spinergy LX Black Spokes	$1,237.00
☐	112RW98	24" Spinergy LX Black Spokes	$1,237.00
☐	112RW99	25" Spinergy LX Black Spokes	$1,237.00
☐	112RW40	26" Spinergy LX Black Spokes	$1,237.00
☐	112RW152	24" Spinergy CLX Carbon Wheel	$1,717.00
☐	112RW153	25" Spinergy CLX Carbon Wheel	$1,717.00
☐	112RW148	24" Proton Wheel	$234.00
☐	112RW149	25" Proton Wheel	$234.00
☐	112RW50	24" Mountain	$292.00

Spinergy Spoke Colors (Optional)

Please select one of the following Spinergy wheel options first. Color spokes N/A with CLX carbon wheels and Spinergy Flexrim .

Spinergy Spox spokes color:

☐ Black ☐ Blue ☐ Red ☐ White ☐ Yellow

Spinergy LX spokes color:

☐ Black ☐ Blue ☐ Green ☐ Orange ☐ Pink
☐ Purple ☐ Red ☐ White ☐ Yellow

Rear Wheel Tire

☐	112RT1		Pneumatic	NC
☐	112RT2	E2211 E2213	Pneumatic Airless Insert *N/A with Xtender.*	$100.00
☐	112RT24	E2211 E2213	Pneumatic Airless Insert - Infinergy® Lightweight - *E-TPU material*	$114.00
☐	112RT3		Full Poly Tire	NC
☐	112RT38	E2218	SHOX Performance Poly	$110.00
☐	112RT25	E2218	Primo Orion Poly	$126.00
☐	112RT39	E2211 E2212	High-Pressure Clincher Black	$110.00
☐	112RT21	E2211 E2212	Schwalbe Marathon Plus Evolution	$164.00
☐	112RT42	E2211 E2212	Schwalbe One	$164.00
☐	112RT40	E2211 E2212	Schwalbe Down Town Two Grip *Only available in 24".*	$147.00
☐	112RT41	E2211 E2212	Schwalbe Right Run *Only available in 24".*	$100.00
☐	112RT27	E2211 E2212	Knobby V-TRAK by Kenda	$110.00
☐	112RT12	E2211 E2212	Mountain *Only available in 24".*	$110.00

Xtender Power Assist

RSH 16.5"-19" with 22" wheels, RSH 17.5"-20" with 24" wheels 0 camber, pneumatic tire. 22" & 24" wheels only. Anti-Tips no charge. N/A w/ Transit and 4-link Suspension. Dual Drive mode available with B4ME. ***Max weight capacity of 265 lbs.*** *N/A with Active Rigid frame.*

☐	112XT6	E0986	22" Xtender Power Assist JWX-2 **NICKEL**	$9,904.00
☐	112XT7	E0986	22" Xtender Power Assist JWX-2 **LITHIUM**	$10,890.00
☐	112XT4	E0986	24" Xtender Power Assist JWX-2 **NICKEL**	$9,904.00
☐	112XT5	E0986	24" Xtender Power Assist JWX-2 **LITHIUM**	$10,890.00

Please select one of the following handrim options

☐	112XH5		Plastic Coated	NC
☐	112XH6		Stainless Steel	NC

Xtender - Other Options

☐	112XA10		Spare NiMH Power Pack - NICKEL	$1,628.00
☐	112XA11		Spare Li-ion Power Pack - LITHIUM	$2,094.00

Xtender Wheel Options

☐	112XA8		SPARE 22" Lite Spoke Pneu Alum	NC
☐	112XA9	E2211 E2213	SPARE 22" Lite Spoke Pneu Plastic	$234.00
☐	112XA2		SPARE 24" Lite Spoke Pneu Alum	NC
☐	112XA4	E2211 E2213	SPARE 24" Lite Spoke Pneu Plastic	$234.00

✔	Option #	HCPCS	Definition	Price

4. REAR WHEELS / SEAT HEIGHT (CONT)

Handrim

See APPENDIX in page 7 for avaiability matrix. See Page 6 for color handrim option.

☐	112HR1		Aluminum Anodized	NC
☐	112HR29		Aluminum Powder coated colored	$82.00
☐	112HR4		Plastic Coated *N/A w/ 25" & 26" Lite Spoke Wheels*	$129.00
☐	112HR22		Natural Fit - Standard Grip	$549.00
☐	112HR23		Natural Fit - Super Grip	$611.00
☐	112HR28		Q-Grip Neoprene Coated	$408.00
☐	112HR39		Ellipse 3R	$500.00
☐	112HR40		Carbolife - Gekko	$535.00
☐	112HR41		Carbolife - Curve L Tetra grip	$575.00
☐	112HR7		Omit Handrim *N/A w/ Ultra Lightweight Wheels.*	NC

Handrim Tab Mount options

Tab mount handrims option only available Spinergy, Proton and Ultra light wheels. Not all combinations of wheels available.

☐	112TB1		Standard Tabs	NC
☐	112TB3		Narrow Tabs	$35.00

Front to Rear Seat Height Matrix

12" Seat Depth	2.5" Max Front to Rear Seat Hgt.
13", 14" Seat Depth	3.0" Max Front to Rear Seat Hgt.
15", 16" Seat Depth	3.5" Max Front to Rear Seat Hgt.
17", 18" Seat Depth	4.0" Max Front to Rear Seat Hgt.
19", 20" Seat Depth	4.5" Max Front to Rear Seat Hgt.

Camber

6° N/A with 5 spoke Mag wheels.

☐	112CI1		0°	NC
☐	112CI2		3°	NC
☐	112CI4		6°	NC

Center of Gravity Preset

Measure from front of back post to the center of rear axle. Xtender 1"- 4".

☐	112CC12		0"	NC
☐	112CC1		.5"	NC
☐	112CC2		1.0"	NC
☐	112CC3		1.5"	NC
☐	112CC4		2.0"	NC
☐	112CC5		2.5"	NC
☐	112CC6		3.0"	NC
☐	112CC7		3.5"	NC
☐	112CC8		4.0"	NC

5. WHEEL LOCKS

Wheel Lock

Not all wheel locks available in all seat depths, wheel size, or COG.

☐	112WL1		High Mount Push	NEW!	NC
☐	112WL2		High Mount Pull	NEW!	NC
☐	112WL45		Ergo Scissor		NC
☐	112WL88		Knee lever		$86.00
☐	112WL30		Compact		$164.00
☐	112WL95		Eagle *(black only)*	NEW!	$175.00
☐	112WL10		Omit Wheel Lock		NC

Extension Handle

☐	112EH6	E0961	Extension Handle (Pair)	$88.00

Direct Mount Wheel Lock (Optional)

Only available with 0° & 3° Camber and 24-25 rear wheels. No mounting clamp hardware, N/A with Aluminum or carbon fiber sideguards.N/A with mountain tires or rear suspension. N/A in 12"-15" seat depths. N/A with height adjustable armrests.

☐	112WH16		Direct Mount Compact Wheel Lock	$164.00

Wheel Lock Options

☐	112WL12		Do Not Mount	NC

6. FOOTREST OPTIONS

Footrest

Angle Adjustable Flip Back N/A w/ 19-20 wide w/ 0" inset. Some Flip back configurations won't allow 2 " ground clearance and will need to raise up.

☐	112F229		Aluminum Tubular	NC
☐	112F274		Aluminum Tubular w/ Snap On Cover	$36.00
☐	112F276	K0040	Angle Adjustable Flip Back	$216.00
☐	112F257	K0040	Angle Adjustable FB Composite	$201.00
☐	112F325	K0040	Angle Adjustable FB Carbon Fiber	$216.00
☐	112F51	K0040	Platform Footrest	$110.00
☐	112F67	K0040	Platform Footrest Composite	$86.00
☐	112F111	K0040	Ultra Lite Platform Footrest *N/A w/ 14" wide and 2" inset, N/A w/ 19-20 wide w/ 0" inset*	$134.00
☐	112F323		Platform Carbon Fiber footrest *Not available on 19"-20" W*	$158.00

Adaptive Platform Spacer

N/A with Aluminum Tubular or Ultra Lite Platform.

☐	112AD1		Adaptive Platform 2" Spacer	$110.00
☐	112AD2		Adaptive Platform 4" Spacer	$110.00
☐	112AD3		Adaptive Platform 6" Spacer	$110.00

Footrest Options

High Mount N/A w/ Tubular footrest.

☐	112DI03	K0038	Leg Strap	$47.00
☐	112DI04	K0038	Extra Leg Strap	$47.00
☐	112DI05		Gel Hanger Cover	$123.00
☐	112DI07		Neoprene Impact Guards	$105.00
☐	112DI02		Wear Pads	$58.00
☐	112DI06		Position Plates *NA for Tubular Footrest*	$58.00
☐	112DI08		High Mount options	$63.00

Lower Leg Length (LLL)

Lower Leg Length is ***measured from seat sling to the top rear of the footrest.*** *See Appendix on Page 7. A minimum 2" ground clearance is required below the footrest. If the selected configuration results in less than 2" of ground clearance the footrest will be raised to 2" ground clearance, which may alter the lower leg length measurement. Available lower leg length is dependent on frame selection including adapter spacers.*

☐ 6"	☐ 8"	☐ 10"	☐ 12"	☐ 14"	☐ 16"	☐ 18"	☐ 20"
☐ 6.5"	☐ 8.5"	☐ 10.5"	☐ 12.5"	☐ 14.5"	☐ 16.5"	☐ 18.5"	☐ 20.5"
☐ 7"	☐ 9"	☐ 11"	☐ 13"	☐ 15"	☐ 17"	☐ 19"	
☐ 7.5"	☐ 9.5"	☐ 11.5"	☐ 13.5"	☐ 15.5"	☐ 17.5"	☐ 19.5"	

© 1/2026 MK-129759 Rev J

✔	Option #	HCPCS	Definition	Price	✔	Option #	HCPCS	Definition	Price

7. BACKREST

Adjustable Back Type Options

☐	112BT96		Folding w/ Double Lock Down Angle Adjustable	NC
☐	112BT122		Freestyle Backrest Folding w/Double Lock Down	$227.00

Active Rigid Back Type Options

0° Equal is perpendicular to floor, + means forward. See Fig 6 in page 7

☐	112BT97		Active Fixed Backrest	NC
		Setting	☐ -4 ☐ -2 ☐ 0 ☐ +2 ☐ +4	

Choose Option 1 or 2

1. Aluminum Height Adjustable Backrest

☐	112B159	Setting	10 "- 12" Back Height	NC
			☐ 10" ☐ 11" ☐ 12"	
☐	112B139	Setting	12 "- 14" Back Height	NC
			☐ 12" ☐ 13" ☐ 14"	
☐	112B138	Setting	14 "- 16" Back Height	NC
			☐ 14" ☐ 15" ☐ 16"	
☐	112B137	Setting	16 "- 20" Back Height	NC
			☐ 16 ☐ 17 ☐ 18 ☐ 19 ☐ 20	

OR

2. Ultra Lightweight Aluminum Fixed Backrest

Select back height. 8", 9", or 10" only available with omit push handles.

☐	112BB21	8"	$88.00	☐	112BB17	14"	$88.00
☐	112BB20	9"	$88.00	☐	112BB18	15"	$88.00
☐	112BB13	10"	$88.00	☐	112BB19	16"	$88.00
☐	112BB14	11"	$88.00	☐	112BB10	17"	$88.00
☐	112BB15	12"	$88.00	☐	112BB11	18"	$88.00
☐	112BB16	13"	$88.00	☐	112BB12	19"	$88.00

Back release options

Twist-lock bar N/A with Freestyle back or Height Adjustable backrest.N/A with 12"-13" width.

Back release options N/A with Active Rigid backrest

☐	112OD24		Push-bar release	STD
☐	112OD25		Twist-lock release	$201.00

Towel Bar

☐	112QT01		Standard Style - 4" Offset	NC
☐	112QT11		Narrow Profile - 3" Offset *Limited w/Solid Backs, Not suggested with 19" & 20" wide.*	$58.00

Push Handles

Integral push handles N/A with Active Rigid backrest.

☐	112PH6		Integral Push Handles	NC
☐	112PH5		Fold Down Push Handles *N/A w/ 10"-12" adj height & 8"-12" fixed height. N/A w/ standard EXO upholstery.*	$116.00
☐	112PH2		Omit Push Handles	NC

Backrest Options

Telescoping Push Handlles have Double "D" tubing to eliminate rotation. Available with Omit push handle and EXO / EXO Pro Tension Adjustable upholstery only.

☐	112A192		Telescoping Push Handles	$250.00
☐	112A195		Telescoping Push Handles - Tall	$250.00

JAY J3 Back

☐	112JB01		J3 Back *To order a J3 Back please select Omit Back Upholstery. See J3 Back Order Form for Part #'s. N/A w/Freestyleback.*	Price List

Backrest Upholstery

*EXO Standard and Tension Adj upholstery binding is **Standard black**.*

☐	112BU88		Standard Upholstery EXO	NC
Color Binding:	☐ Silver	☐ Orange	☐ Red ☐ Blue	$26.00
☐	112BU70	E2611	Backrest Tension Adj Ballistic Nylon **Reference 186BU70 for billing*	$367.00
☐	112BU89	E2611	Backrest Tension Adj EXO **Reference XXXBU89 for billing*	$387.00
Color Binding:	☐ Silver	☐ Orange	☐ Red ☐ Blue	$26.00
☐	112BU90	E2611	Backrest Tension Adj EXO Pro 3DX **Reference 186BU71 for billing*	$387.00
Color Binding:	☐ Silver	☐ Orange	☐ Red ☐ Blue	$26.00
☐	112BU14		Omit Back Upholstery	-$15.00

Military Service Patches

☐	112VU1		US Marines Patch	$116.00
☐	112VU2		US Army Patch	$116.00
☐	112VU3		US Navy Patch	$116.00
☐	112VU4		US Air Force Patch	$116.00
☐	112VU12		Coast Guard Patch	$116.00
☐	112VU5		Purple Heart Patch	$116.00
☐	112VU8		Purple Heart with Marines Patch	$181.00
☐	112VU9		Purple Heart with Army Patch	$181.00
☐	112VU10		Purple Heart with Navy Patch	$181.00
☐	112VU11		Purple Heart with Air Force Patch	$181.00
☐	112VU13		Purple Heart with Coast Guard Patch	$181.00

Freestyle Backrest Option 3

Accessories such as head supports & lateral supports are not available with Freestyle backrest. The Freestyle back comes standard with a small lumbar positioning component

Available with Plastic side guards and limited ranges with Carbon fiber sideguard with fender. Chair Seat depth wil be reduced by 1" with backrest.

Backrest Type

☐	112JB06	E2613	JAY J3 Back LT Aluminum *model (J3PAXXXYYZZ)*	$625.00
☐	112JB07	E2613	JAY J3 Back LT Carbon Fiber *model (J3CFPAXXXYYZZ)*	$1,047.00

Backrest Width

☐	112JQ01		14" Backrest Width	NC
☐	112JQ02		16" Backrest Width	NC
☐	112JQ03		18" Backrest Width	NC
☐	112JQ04		20" Backrest Width	NC

Backrest Height

Medium size backrest not available in Carbon Fiber.

☐	112QF04		Small 6.5" shell hgt, 9" back height	NC
☐	112QF05		Medium 8" shell hgt, 10.5" back height	NC
☐	112QF06		Tall 9.5" shell hgt, 12" back height	NC

Height Ranges	Dim "A"	Dim "B"
Small	12.0" - 14.5"	3.0" - 5.5"
Medium	12.0" - 16.0"	1.5" - 5.5"
Tall	12.0" - 17.5"	0.5" - 5.5"

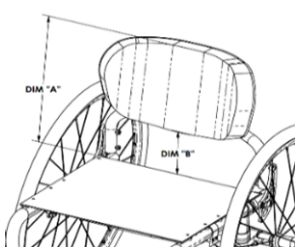

Backrest Color

Not applicable with carbon fiber back or Zebra color.

☐	112GZ01		Black	NC
☐	112GZ02		Matching Frame- Standard Colors	NC
☐	112GZ03		Matching Frame- Personalized Color	$58.00

© 1/2026 MK-129759 Rev J

✔	Option #	HCPCS	Definition	Price	✔	Option #	HCPCS	Definition	Price

8. ARMREST / SIDEGUARDS

Armrest - Padded Swing Away

Some limitations when used with the Angle Adjustable Back in the rear most setting
Please select a setting, will default to 11" if no selection is made.

☐	112AA162		Padded Swing-Away Fixed height (13")	NC
☐	112AA18	E0973	Padded Swing-Away STD (9" to 14")	$263.00
	Setting	☐ 9"	☐ 10" ☐ 11" ☐ 12" ☐ 13" ☐ 14"	

Armrest - Height Adjustable

☐	112AA11	E0973	Single Post Height Adjustable - Std *Range 8" - 13". Adjust in 1" increments*	$333.00
☐	112AA29	E0973	Single Post Height Adjustable - Low *Range 6.5" - 10.5". Adjust in 1" increments*	$333.00

Armpad - For Height Adjustable

☐	112AM23		Desk Length (10") *Classic*	NC
☐	112AM21		Desk Length (10") *Contour*	NC
☐	112AM24		Full Length (14") *Classic*	NC
☐	112AM22		Full Length (14") *Contour*	NC
☐	112AM27		Ergo Pad (12")	NC

Side Guards

Increases overall width of chair. Some interferance may exist w/ padded SA arms at lowest settings
Not available w/Height Adjustable Arms. ***Alum Flip sideguard option N/A with Twist-lock fold release, Freestyle back and Active Rigid.***

☐	112SG33	K0108	Plastic Standard	$169.00
☐	112SG29	K0108	Plastic Low	$169.00
☐	112SG35	K0108	Aluminum	$286.00
☐	112SG36	K0108	Aluminum w/ Fender	$321.00
☐	112SG12	K0108	Carbon Fiber	$537.00
☐	112SG41	K0108	Carbon Fiber Long w/LG Fender	$607.00
☐	1129A05	K0108	Flip Back Option *Aluminum side guard only.*	$114.00

Side Guard - Color Option

Available with Aluminum or Aluminum with Fender. Not applicable to carbon fiber options.

☐	112GE01		Black	NC
☐	112GE02		Matching Frame- Standard Colors	NC
☐	112GE03		Matching Frame- Personalized Color	$58.00

9. KEY OPTIONS AND ACCESSORIES

Anti Tips

Anti Tip Single Side N/A 12W-14W range, N/A w/ Rear suspension. Included with Xtender.

☐	112AT1	E0971	Anti Tips (Pair)	$175.00
☐	112AT14	E0971	Anti Tip Single Side - Flip Up ☐ Left ☐ Right (Facing from rear)	$205.00
☐	112AT83	E0971	Tip assist ☐ Right Mnt ☐ Left Mnt	$36.00
☐	112AT20	E0971	Sport Anti Tip / 5th wheel	$175.00

Active lifestyle options

LED lights mounted on caster arms, battery & controller on leg strap.
Leg strap included with LED lights.

☐	112A1		Backpack - Adult	$88.00
☐	112A2		Backpack - Kids	$70.00
☐	1121A01		Seat Pouch Black	$58.00
☐	1128A47		Mobile phone pocket	$30.00
☐	1129A06		Twin LED lights	$253.00
☐	112A999		Quickie Water Bottle & Holder	$63.00

Spoke Guards

Only available with Lite spoke. N/A w/ Xtender Power Assist.

☐	1124A01	K0065	Quickie Black Spoke Guard	$134.00
☐	1124A02	K0065	Quickie Clear Spoke Guard	$134.00

Positioning Belt

☐	112A117	E0978	Belt 2" Aircraft Buckle w/Clamps	$129.00
☐	112A118	E0978	Belt 2" Aircraft Buckle Pad w/Clamp	$139.00
☐	112A141	E0978	Belt 1.5" Auto Buckle w/Clamps	$82.00
☐	112A804		Positioning Belt Clamps Only	$58.00

Accessories

☐	112A2100	E2207	Crutch Holder	$227.00
☐	1128A21		Tool Kit	$63.00
☐	112NP01		Gel Swing Away Pad	$175.00
☐	1129A07		Frame Protections pads	$114.00

10. COLOR

NEW! Standard Frame Color

Handrim color option only available if Aluminum Coated colored option was selected.
Black not available as base w/Zebra.

				Handrim
☐	112C214		Black (Gloss)	☐
☐	112C215		Black (Matte)	☐
☐	112C211		Celestial Sapphire	☐
☐	112C212		Desert Sage	☐
☐	112C213		Desert Tan	☐
☐	112C216		Metallic Shadow	☐
☐	112C217		Midnight Blue	☐
☐	112C218		Mystic Purple	☐
☐	112C219		Petal Pink	☐
☐	112C220		Pink Power	☐
☐	112C221		Red Pepper	☐
☐	112C222		Royal Blue	☐
☐	112C223		Salute Green	☐
☐	112C224		Scarlet Noir	☐
☐	112C225		Silver Ore	☐
☐	112C226		Solar Orange	☐
☐	112C227		Starlight White	☐
☐	112C228		Storm Gray	☐
☐	112C229		Turbo Green	☐
☐	112C230		Velocity Yellow	☐

Personalized Frame Color

☐	112C112		Desert Camouflage	$460.00
☐	112C43		Mossy Oak Camouflage	$460.00
☐	112C42		Stars & Stripes	$460.00
☐	112C108		Zebra *(Choose above base color) Std with White unless above base paint is chosen N/A w/ Blackk, Matte Black.*	$460.00

Frame Decal Colors

Applies to front caster link decals and aluminum & carbon fiber sideguards.

☐	112D16		Black	NC
☐	112D17		Blue	NC
☐	112D18		Orange	NC
☐	112D19		Red	NC
☐	112D20		Silver	NC

Anodized Color Package

Forks, Rear Axle Clamp,and backrest bracket. N/A with Frog Legs.

☐	112EB07		Black	NC
☐	112EB08		Blue	$183.00
☐	112EB13		Gold	$183.00
☐	112EB09		Lime Green	$183.00
☐	112EB10		Purple	$183.00
☐	112EB11		Red	$183.00
☐	112EB12		Ti Grey	$183.00

Frame Graphics

Graphic designs on front frame tubes. N/A with transit & Matte Black Cherry.

☐	1128A24		Bloom	$361.00
☐	1128A25		Dragon	$361.00
☐	1128A26		Ghost Flames	$361.00
☐	1128A27		Retro Squares	$361.00
☐	1128A28		Tribal	$361.00
☐	1128A33		Floating Dots Black	$291.00
☐	1128A34		Floating Dots Matte Black	$291.00
☐	1128A78		Floating Dots Blue	$291.00
☐	1128A76		Floating Dots Orange	$291.00
☐	1128A35		Floating Dots Silver (grey)	$291.00
☐	1128A77		Floating Dots Red	$291.00

✔	Option #	HCPCS	Definition	Price	✔	Option #	HCPCS	Definition	Price

10. COLOR (CONT)

Built For Me

To inquire about any unique personalized for Quickie products, contact:
Phone: (800) 333 - 4000, Option #3, Fax: (800) 333 9011

built4me ON-CHAIR BUILD-READY SPECIALIZED UNIQUE

Frame graphics

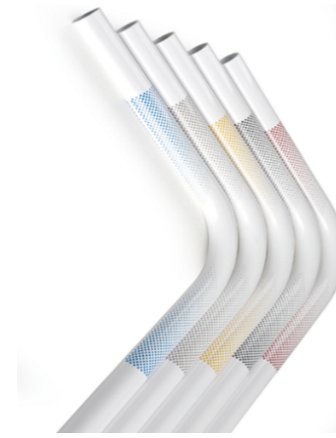

11. APPENDIX

Handrims	Wheels					
	5 Spoke Mag	Lite Spoke	Ultra Lightweight	Spinergy	Mountain	Proton
Aluminum Anodized / Painted	20,22,24	20,22,24,26	22,24,25	22,24,25,26	24	24,25
Plastic Coat	20,22,24	22,24	-	24,26	-	-
Natural Fit - Standard Grip	24	22,24,25,26	-	22,24,25,26	-	-
Natural Fit - Super Grip	24	22,24,25,26	-	22,24,25,26	-	-
Q Grip Neoprene Coated	-	24,25	-	24,25	-	-
Ellipse 3R	24	24,25	-	24,25	-	
Carbolife - Gekko	-	24,25	-	24,25	-	24,25
Carbolife - Curve L Tetra grip	-	24,25	-	24,25	-	24,25
Omit Handrim	20,22,24	-	-	22,24,25,26	24	24,25

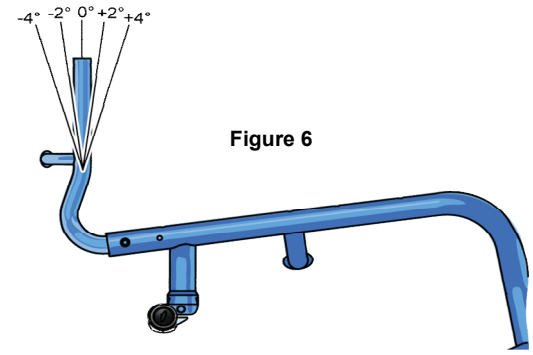

Figure 6

Tire	Wheel				
	5 Spoke Mag	Lite Spoke	Ultra Lightweight	Spinergy	Proton
Pneumatic	20,22,24	20,22,24,26		22,24,26	24
Pneumatic w/ Airless Insert	20,22,24	20,22,24,26		22,24,26	
Pneum w/ Airless Insert - LTW	20,22,24	20,22,24		20,22,24	
Full Poly	20,22,24	20,22,24		22,24	
SHOX Performance Poly	20,22,24	20,22,24,25		22,24,25	
Primo Orion Poly	20,22,24	20,22,24		20,22,24	
High-Pressure Clinch Blk	22,24	22,24,26	24	22,24,26	24
Schwalbe Marathon Plus	24	24,25,26	22,24,25	24,25,26	24,25
Schwalbe One	24	24,25	24,25	24,25	24,25
Schwalbe Down Town	24	24	24	24	24
Schwalbe Right Run	24	24	24	24	24
Knobby V Trak by Kenda	24	24	24	24	24
Mountain		24		24	
20"= 451 mm 22" = 501 mm 24" = 540 mm 25" = 559 26" = 590					

Figure 7

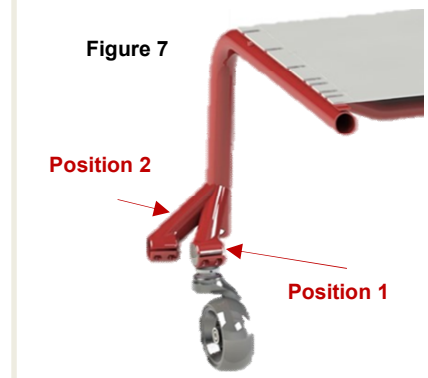

Lower Leg Length

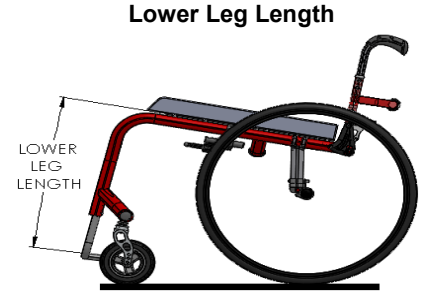

Figure 3

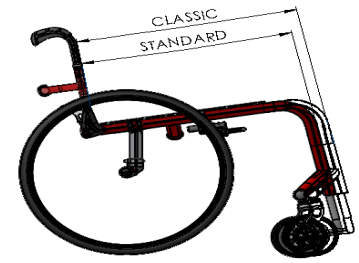

Sunrise Medical (US) LLC
12002 Volunteer Blvd. Mount Juliet, TN 37122

© 1/2026 MK-129759 Rev J